# SPECIFICATIONS

**DESCRIPTION:**
4" octagonal J-Box with 3" mud ring, for use with GWS series fixtures.

**MATERIAL:**
Standard overall material is galvanized steel
**HL-199-JB** - Galvanized Steel

**FINISH:**
**N** - Natural

**VOLTAGE:**
Total volume 15.8 cu in.

**MOUNTING:**
J-Box has a raised 1/2" mud ring for drywall mounting and several 1/2-NPS knock-outs.

**SAMPLE ORDER SPECIFICATION:**
HL-199-JB-N

**RATING:**
Wet/ damp dry location.

Intertek

**MADE IN THE USA**

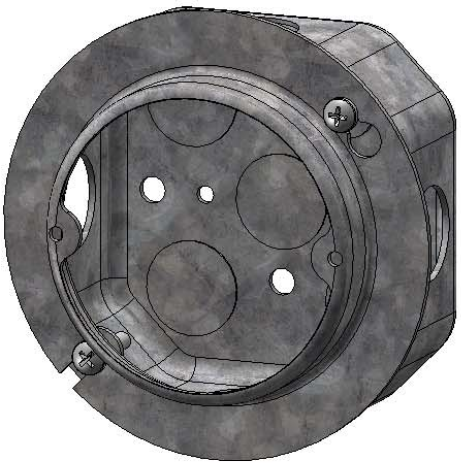

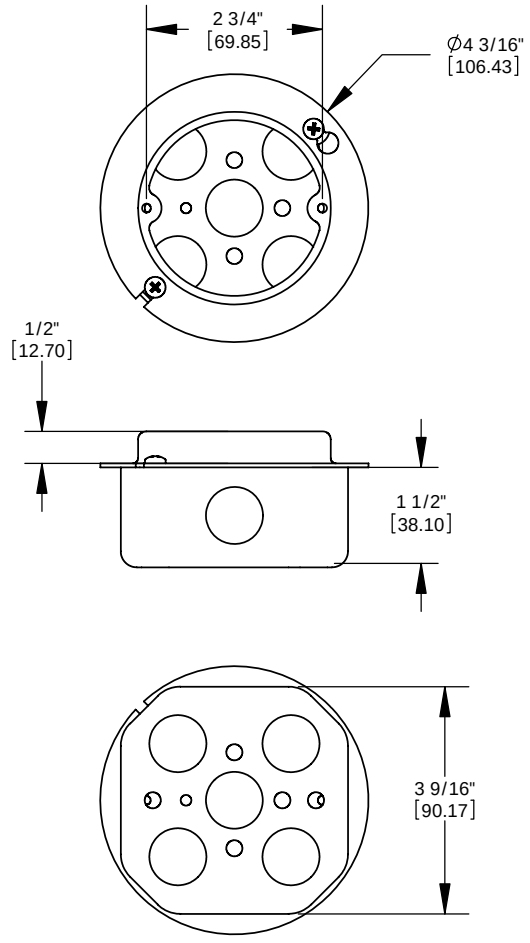


ORDER SPECIFICATION: _____ - _____ - _____ - _____ - _____
Fixture | Finish | Lamping | Voltage | Options/Access.

PROJECT:

APPROVED:

NOTE:

TYPE:

HEVI LITE, INC.
9714 Variel Ave, Chatsworth, CA 91311
Tel., (818) 341-8091 - Fax (818) 998-1986
Web Site http://www.hevilite.com

CATALOG NUMBER:
**HL-199-JB**

THE INFORMATION CONTAINED IN THIS DRAWING IS THE SOLE PROPERTY OF HEVI LITE, INC. ANY REPRODUCTION IN PART OR WHOLE WITHOUT THE WRITTEN PERMISSION OF HEVI LITE, INC. IS PROHIBITED.