# SPECIFICATIONS

**DESCRIPTION:**
Wall mount MR16 accent fixture. Suitable for wet/damp/dry location installations.

**MATERIAL:**
Standard overall material is 6061 aluminum.
- **HL-340** - Machined Aluminum (Standard)
- **HL-340-2b** - Machined Brass

**FINISH:**
- **AA** - Anodized Satin Aluminum
- **AP** - Powder Coat Aluminum
- **BK** - Powder Coat Black
- **BZ** - Powder Coat Bronze
- **WT** - Powder Coat White
- **N** - Natural, for Stainless Steel and Brass

**HALOGEN LAMPING OPTION:**
Lamp Type - 12V halogen MR16 lamp, bi-pin GX5.3 base, 50W max, not included (standard).

**LED OPTIONS**
Integral high output LED, warm white 85 CRI (3000K CCT) standard, others available.
- **3LED** - 3W LED - 180 lumens
- **8LED** - 8W LED - 300 lumens
- **8LED-E** - 8.4W LED - 565 lumens

**OPTICS**
3LED and 8LED:
- **SP** - Spot, 12°
- **NF** - Narrow Flood, 24°
- **FL** - Flood, 36°

8LED-E:
- **SP** - Spot 14°
- **NF** - Narrow Flood, 25°
- **MF** - Medium Flood, 30°
- **FL** - Flood, 40°

**VOLTAGE:**
- **12** - 12 VAC output transformer required, not included.

**MOUNTING:**
Fixture is equipped with a 4.75" mounting plate and (2) mounting screws.

**OPTIONS:**
Glare shields
- **GL-10** - Short Angled, aluminum
- **GL-11** - Angled, aluminum
- **GL-12** - Angled, brass
- **GL-13** - Straight, aluminum
- **GL-14** - Straight, brass

Lenses/Louvers/Color Filters
- **LA-1** - Hexcell Louver (Black)
- **LA-2** - Prismatic lens
- **LA-3** - Linear spread lens
- **LA-4** - Soft focus lens (diffused)
- **LA-5** - Moonlight lens
- **LA-6** - Blue lens

See fixture accessories for more information.

**SAMPLE ORDER SPECIFICATION:**
HL-340-AA-12-LA-6

**RATING:**
Wet/damp/dry location.

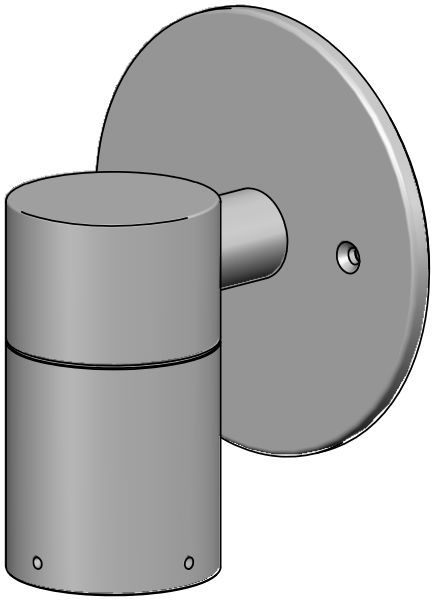

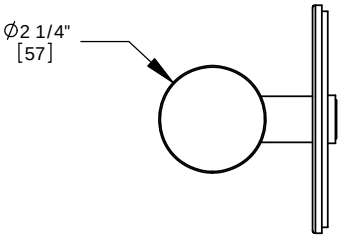


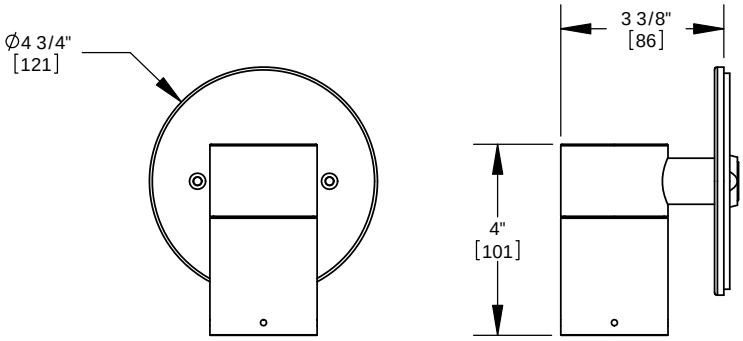


Intertek

**MADE IN THE USA**

ORDER SPECIFICATION: _____ - _____ - _____ - _____ - _____
Fixture Finish Lamping Voltage Options/Access.

PROJECT:

APPROVED:

NOTE:

TYPE:

HEVI LITE, INC.
9714 Variel Ave, Chatsworth, CA 91311
Tel., (818) 341-8091 - Fax (818) 998-1986
Web Site http://www.hevilite.com

CATALOG NUMBER:
**HL-340**

THE INFORMATION CONTAINED IN THIS DRAWING IS THE SOLE PROPERTY OF HEVI LITE, INC. ANY REPRODUCTION IN PART OR WHOLE WITHOUT THE WRITTEN PERMISSION OF HEVI LITE, INC. IS PROHIBITED.