SPECIFICATIONS

DESCRIPTION:
MR11 halogen sign light with a 24" 90˚ stem extension. Suitable for wet/damp/dry location installations.

MATERIAL:
Standard overall material is 6061 aluminum.
HL-711 - Machined Aluminum

FINISH:
AA - Anodized Satin Aluminum
AP - Powder Coat Aluminum
BK - Powder Coat Black
BZ - Powder Coat Bronze
WT - Powder Coat White

LAMPING:
Lamp Type - 12V halogen MR11 lamp, bi-pin G4 base, 35W max, not included.

VOLTAGE:
12 - 12 VAC output transformer required, not included.

MOUNTING:
Fixture is equipped with a 4.75" mounting plate and (2) mounting screws.

OPTIONS:
Glare shields
GL-5 - Angled, aluminum
GL-7 - Straight, aluminum
Lenses/Louvers/Color Filters
LA-1-11 - Hexcell Louver (Black)
LA-2-11 - Prismatic lens
LA-3-11 - Linear spread lens
LA-4-11 - Soft focus lens (diffused)
LA-5-11 - Moonlight lens
LA-6-11 - Blue lens
See fixture accessories for more information.

SAMPLE ORDER SPECIFICATION:
HL-711-AA-12-GL-7-LA-2-11

RATING:
Wet/damp/dry location.

Intertek

MADE IN THE USA

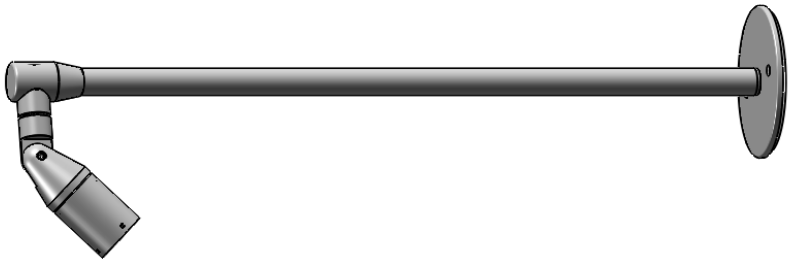

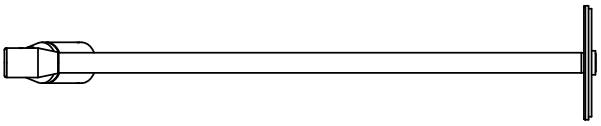

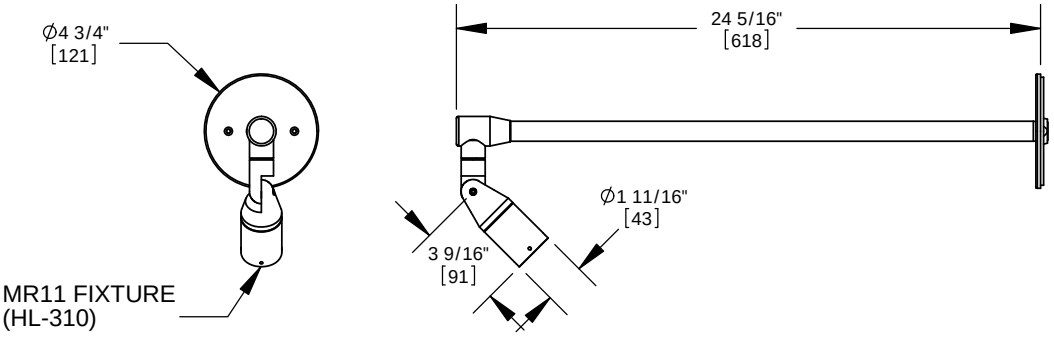

ORDER SPECIFICATION: _____ - _____ - _____ - _____ - _____
Fixture Finish Lamping Voltage Options/Access.

PROJECT:

APPROVED:

NOTE:

TYPE:

HEVI LITE, INC.
9714 Variel Ave, Chatsworth, CA 91311
Tel., (818) 341-8091 - Fax (818) 998-1986
Web Site http://www.hevilite.com

CATALOG NUMBER:
HL-711

THE INFORMATION CONTAINED IN THIS DRAWING IS THE SOLE PROPERTY OF HEVI LITE, INC. ANY REPRODUCTION IN PART OR WHOLE WITHOUT THE WRITTEN PERMISSION OF HEVI LITE, INC. IS PROHIBITED.