SPECIFICATIONS

DESCRIPTION:
PAR38 angled glare shield. Suitable for wet/damp/dry location installations.

MATERIAL:
Standard overall material is 6061 aluminum.
GL-38 - Machined Aluminum

FINISH:
AA - Anodized Satin Aluminum
AP - Powder Coat Aluminum
BK - Powder Coat Black
BZ - Powder Coat Bronze
WT - Powder Coat White

MOUNTING:
Glare shield fits all PAR38 fixtureswith 5.50" bezels.

SAMPLE ORDER SPECIFICATION:
GL-38-BZ

RATING:
Wet/damp/dry location.

MADE IN THE USA

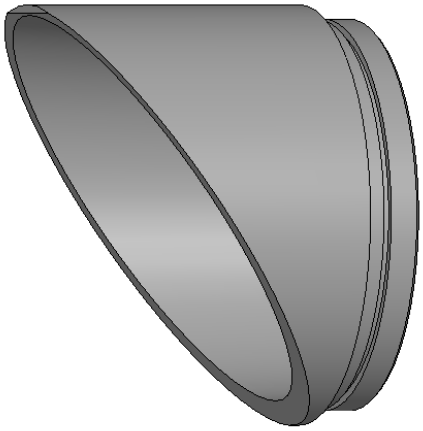

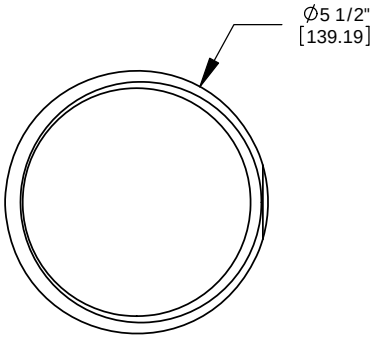

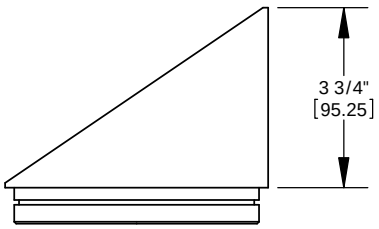

ORDER SPECIFICATION: _____ - _____ - _____ - _____ - _____
Fixture Finish Lamping Voltage Options/Access.

PROJECT:

APPROVED:

NOTE:

TYPE:

HEVI LITE, INC.
9714 Variel Ave, Chatsworth, CA 91311
Tel., (818) 341-8091 - Fax (818) 998-1986
Web Site http://www.hevilite.com

CATALOG NUMBER:
GL-38

THE INFORMATION CONTAINED IN THIS DRAWING IS THE SOLE PROPERTY OF HEVI LITE, INC. ANY REPRODUCTION IN PART OR WHOLE WITHOUT THE WRITTEN PERMISSION OF HEVI LITE, INC. IS PROHIBITED.