SPECIFICATIONS

DESCRIPTION:
Standard class 1 low voltage lighting magnetic transformers in 3R case. Suitable for wet location installations.

MODELS AVAILABLE:
- **HLT-100** - 100W - 10LB - Size A
- **HLT-150** - 150W - 11LB - Size A
- **HLT-250** - 250W - 13LB - Size A
- **HLT-300** - 300W - 13LB - Size A
- **HLT-500** - 500W - 19LB - Size C
- **HLT-600** - 600W - 22LB - Size C
- **HLT-750** - 750W - 23LB - Size B
- **HLT-1000** - 1000W - 28LB - Size D

DIMENSIONS:

	H	L	W
Size A	4 7/8"	4 5/8"	6-3/4"
Size B	4 7/8"	4 5/8"	8 1/4"
Size C	5 5/8"	5 1/4"	8 1/4"
Sizd D	5 5/8"	5 1/4"	10 1/4"

VOLTAGE:
Transformer Type - Stepdown, low voltage, isolated secondary.
Primary voltage - 120 or 277 VAC .
Secondary voltage - 12 VAC .
Frequency - 60Hz.
Other voltages available, consult factory
- **120** - 120VAC
- **277** - 277VAC, (excluding 150W, 250W)

DIMMING: Magnetic Low Voltage (MLV), Symmetric Forward Phase Control.

MOUNTING:
Transformer case has 4 mounting holes.

OPTIONS:
- **CP** - 3 prong cord and plug, 3' length

SAMPLE ORDER SPECIFICATION:
HLT-150-120-CP

RATING:
UL listed for indoor and and wet location lighting.
C-ETL listed for Canada.

Intertek

MADE IN THE USA

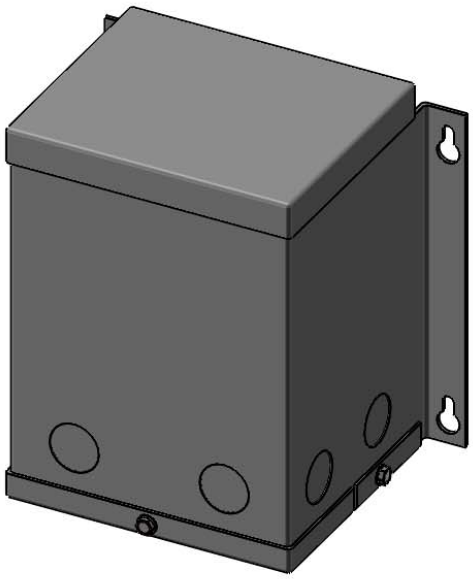

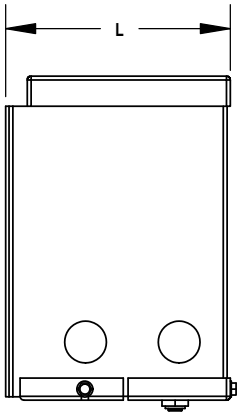

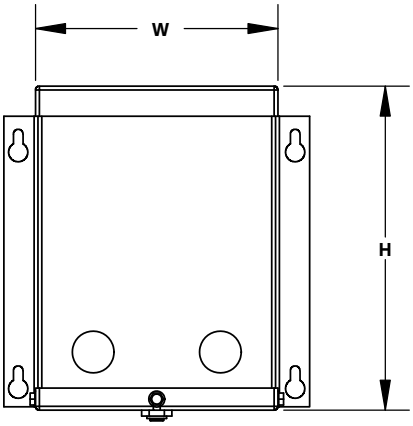

ORDER SPECIFICATION: _____ - _____ - _____ - _____ - _____
Fixture Finish Lamping Voltage Options/Access.

PROJECT:

APPROVED:

NOTE:

TYPE:

HEVI LITE, INC.
9714 Variel Ave, Chatsworth, CA 91311
Tel., (818) 341-8091 - Fax (818) 998-1986
Web Site http://www.hevilite.com

CATALOG NUMBER:
HLT-XXX

THE INFORMATION CONTAINED IN THIS DRAWING IS THE SOLE PROPERTY OF HEVI LITE, INC. ANY REPRODUCTION IN PART OR WHOLE WITHOUT THE WRITTEN PERMISSION OF HEVI LITE, INC. IS PROHIBITED.