SPECIFICATIONS

DESCRIPTION:
Straight glare shield. Suitable for wet/damp/dry location installations.

MATERIAL:
Standard overall material is 6061 aluminum.
GL-381 - Machined Aluminum

FINISH:
AA - Anodized Satin Aluminum
AP - Powder Coat Aluminum
BK - Powder Coat Black
BZ - Powder Coat Bronze
WT - Powder Coat White

MOUNTING:
Glare shield fits HL-380 fixtures.

SAMPLE ORDER SPECIFICATION:
GL-381-AA

RATING:
Wet/damp/dry location.

MADE IN THE USA

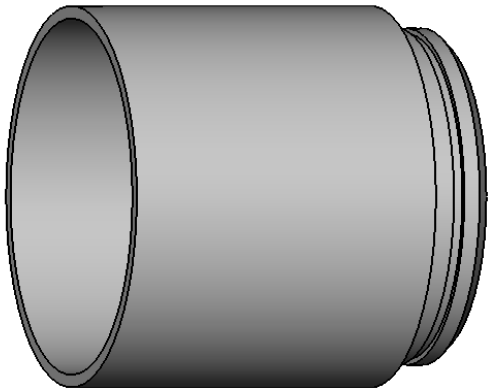

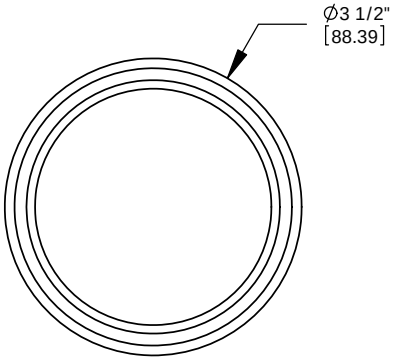

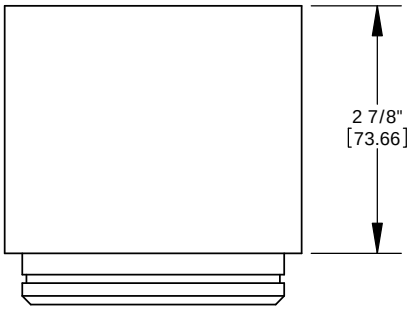

ORDER SPECIFICATION: _____ - _____ - _____ - _____ - _____
Fixture Finish Lamping Voltage Options/Access.

PROJECT:

APPROVED:

NOTE:

TYPE:

HEVI LITE, INC.
9714 Variel Ave, Chatsworth, CA 91311
Tel., (818) 341-8091 - Fax (818) 998-1986
Web Site http://www.hevilite.com

CATALOG NUMBER:
GL-381

THE INFORMATION CONTAINED IN THIS DRAWING IS THE SOLE PROPERTY OF HEVI LITE, INC. ANY REPRODUCTION IN PART OR WHOLE WITHOUT THE WRITTEN PERMISSION OF HEVI LITE, INC. IS PROHIBITED.